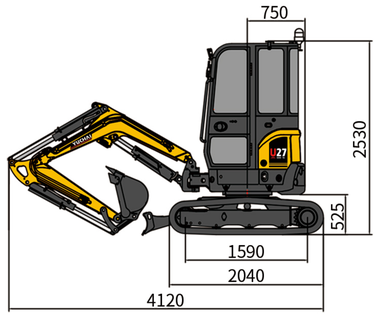

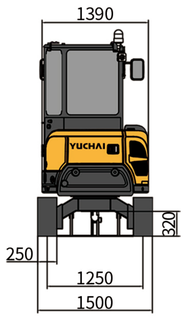

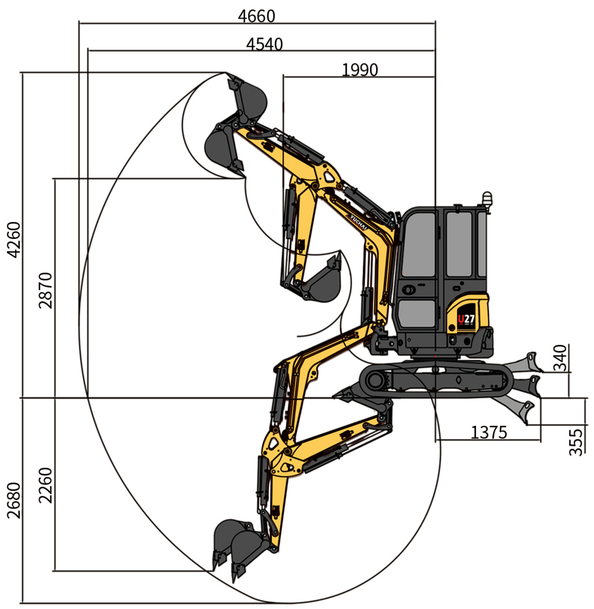

U27 Technical Specification

Basic parameters	
Machine weight	2600kg (Canopy)/2740kg (Cabin)
Bucket capacity	0.09 m^3
Width of bucket	510 mm
Performance parameters	
Engine model	Yanmar 3TNV80F
Emission Standard	Euro V / EPA Tier 4F
Engine power	15.2kW/2500rpm
Max. Gradeability	30°
Max. digging force of arm	14.4 kN
Max. digging force of bucket	23.1 kN
Traveling speed	4.2/2.3 km / h
Max. hauling force	26 kN
Slewing speed of platform	10~12 rpm
Operating parameters	**Standard / Longer arm**
Max. digging height	4170mm / 4260mm
Max. digging depth	2540mm / 2680mm
Max. digging radius	4520mm / 4660mm
Max. digging radius on ground level	4400mm / 4540mm
Max. dumping height	2780mm / 2870mm
Min. slewing radius	1950mm / 1990mm
Max. vertical digging depth	2240mm / 2260mm
Transportation dimensions	
Overall length (standard /longer)	4110mm / 4120mm
Overall width	1500 mm
Overall height	2490mm(Canopy) / 2530 mm (Cabin)
Other parameters	
Width of undercarriage	1500 mm
Length of track	2040 mm
Width of track	250 mm
Minimum ground clearance	320 mm
Height between platform and ground	525 mm
Platform tail turning radius	750 mm
Length to center of rollers	1590 mm
Fuel tank capacity	30 L
Hydraulic oil tank capacity	25L
Track gauge	1250 mm
Working Pressure	24Mpa
Flow rate	61.6L/Min
AUX1 Pressure/ Flow rate	21 Mpa| 18/10 L/Min
AUX2 Pressure/ Flow rate	21 Mpa| 36 L/Min
Arm length (standard /longer)	1150 mm/1300 mm
Boom length	2020 mm
Steering head angle	47°(L)/74°(R)

*Specifications are subject to change without prior notice .

GUANGXI YUCHAI EQUIPMENT TECHNOLOGY CO. , LTD.

Address: Yuchai Engineering Machinery Industry Center, Luchuan,Guangxi, China

Email: dig@yuchai.cn,ychi-export@yuchai.cn | Website: www.yuchaicm.com

Tel: +86-775-3223503 | Fax: +86-775-3223503

Facebook

YUCHAI
YUCHAI EQUIPMENT

MINI EXCAVATOR

Machine weight : 2600kg (Canopy)/2740kg (Cabin) | Engine model : Yanmar 3TNV80F

Bucket capacity: 0.09 m^3 | Engine power : 15.2 kW / 2500 rpm

Overall dimensions (L x W x H): 4110mm x 1500mm x 2490 mm (Cabin)

U27

Yuchai – Pioneering Compact Construction Solutions

- Yuchai, the manufacturer of China's first mini excavator (Model: WY4, 1990) and a professional producer of compact construction equipment, brings you the all-new Yuchai U27 mini excavator.
- This powerhouse mini excavator delivers exceptional capabilities that surpass expectations – whether you're new to Yuchai or a longtime partner – redefining operational excellence on every jobsite.

YUCHAI'S

Yuchai U27 Mini-Excavator

The U27 is designed to be compact yet robust, powered by a Yanmar engine that meets the Euro V emission standard, delivering exceptional power performance. Meticulously engineered by Yuchai's hydraulic design team, the load-sensing hydraulic system ensures efficient, reliable, and smooth hydraulic movements even in demanding working conditions, making it ideal for both construction and landscaping applications.

Compact Design, Superior Performance:

- The U27 mini excavator is powered by a Japanese-engineered Yanmar 3TNV80F engine, complying with the strictest Euro V and EPA T4F emission standards.
- Exceptional reliability with superior fuel efficiency.
- Substantial low-speed torque delivery for digging and heavy lifting operations.
- Globally established service network ensuring readily available spare parts.

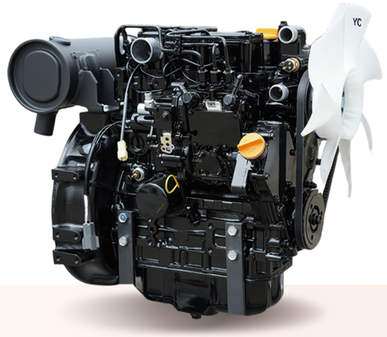

The U27 is more than a conventional mini excavator—its exceptional productivity will boost your bottom line.

Discover its technical features now and contact us to unlock further advantages.

1 Enhanced Cylinder Protection

- First comprehensive cylinder guard system implemented on Yuchai excavators.
- Sliding protective plates shield boom, arm, and bucket cylinders from falling-object damage.

2 The U27 comes standard with two auxiliary hydraulic circuits, enabling quick-connect compatibility with a range of attachments such as buckets, hydraulic breakers, augers, and log grapples. Combined with the electronically proportional joysticks, operation becomes exceptionally smooth and effortless.

Unique Forced-Air Cooling System

- Maintains seat bracket temperature at around 45°C through Forced-Air Cooling system, ensuring operator comfort;
- High-velocity airflow automatically dislodges dust particles to preserve radiator clean.

Distributor

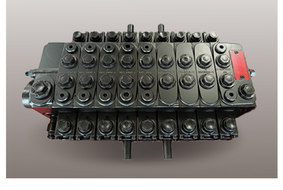

Pump

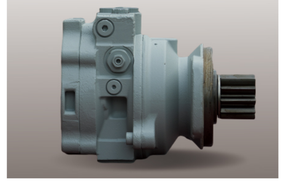

Traveling motor

Slewing motor

Outstanding Hydraulic Design

| Operating pressure of 24 Mpa with max.
| Flow rate of 61.6 L/min.
| Key specs: 0.09 m^3 bucket.
| 12 rpm swing .
| 13.4 kN bucket force.

Compact Dimensions

- Space-optimized design for operation in confined spaces.
- Transportable via standard light-duty trailers across Europe.

Premium Cab
Where safety meets comfort

Ergonomically Engineered Cab

- Incorporates 36 years of European users' feedback to optimize Seat Index Point (SIP) positioning, delivering superior seating comfort.
- The ergonomically designed bilateral armrests significantly reduce hand fatigue during prolonged operation.

1 The cab, equipped with a Tip-Over Protective Structure (TOPS) and Falling Object Protective Structure (FOPS), along with additional features such as a radio, an elastic fabric seat with a high backrest and headrest, a heater, and safety elements including seat belts and a safety hammer, offers multifaceted advantages, providing the operator with both comfort and safety.

2 The U27 offers both regular joysticks and proportional joysticks (for Premium model).

- The proportional joystick is with thumb roller operation, delivering intuitive and precise hydraulic control.

- Concise user interface

- LCD instrument
- Wide and comfortable foot space

- Spacious and comfortable cabin

Simple and Convnient Maintenance

Opening bonnet design optimum arrangement of internal parts for quick and efficient service and a shorter downtime.
Metal covers are stronger and easier to repair

High Cost-Performance

The U27 mini excavator delivers exceptional cost-performance. With its heavy-duty structure, powerful engine, and versatile capabilities, the U27 maximizes your investment return.
Its efficient and reliable performance enables you to complete construction and excavation projects with the lowest operating costs and highest productivity. More than just a purchase, the U27 is a long-term investment in your operational efficiency and profitability.

Optimal Maintenance Points

The U27 mini excavator's centralized maintenance points enable quick and efficient maintenance, maximizing uptime and minimizing maintenance

11 Hydralic Quick Coupler Adapter

10 Boom Holding Valve

07 Hydraulic Oil Guage

01 Oil filter

02 Fuel filter

03 Air filter

04 Coolant

05 Battery

06 Tank & radiator

08 Centralized lubrication points

09 Main battery switch

Equipment

- Standards and requirements for special equipment vary by country.
- For more details on equipment options, please feel free to contact us.

Component Part	Description	Standard	Optional
Cabin/Canopy	LCD instrument	•	
	Radio with USB(for cabin only)	•	
	Cup holder	•	
	High-back suspension seat		•
	Heater(for cabin only)	•	
	FOPS		•
	TOPS	•	
	Front wipers(for cabin only)	•	
	Rearview mirrors	•	
	Cigarette lighter(for cabin only)	•	
Working device	Steering head	•	
	Mechanical quick Coupler	•	
	Quick connector for AUX. pipes		•
	Hydraulic quick coupler pipes		•
	Hydraulic quick coupler		•
	Tilting coupler		•
	Tiltrotator		•
	300mm Bucket		•
	510mm Bucket	•	
	1,200mm Bucket		•
	1,150 mm Arm	•	
	1,300 mm Arm		•
	Hammer lines	•	
	Hydraulic hammer		•
	Auger		•
	Thumb		•
	Dozer blade	•	
	Dozer & Boom cylinder protection plate	•	
	Arm cylinder protection plate	•	
	Bucket cylinder protection plate	•	
	Boom holding valve		•
	Arm holding valve		•
Tracks	250 mm Rubber track	•	
	300 mm Rubber track		•
	250 mm Steel track		•
Hydraulic system	Traveling alarm		•
	Dual electric proportional control joystick		•
	Load sensing hydraulic system	•	
	ISO&SAE control switch		•
	AUX1	•	
	AUX2	•	
	AUX1 adjustable pressure		•
	AUX1 & AUX2 adjustable flow		•
Lighting	2 LED Work Lights at the front	•	
	1 Rear LED work light	•	
	1 Boom LED work light	•	
	Beacon on the canopy/cabin	•	
Others	Extra counterweight		•

U27 Max. digging radius-4520 mm (without quick coupler)

Standard Arm's Digging Force: 14.4 kN (market-leading performance)

- **Dual-arm versatility:** Standard/extended arm can meet the needs of different working conditions.
- **Key specs:** 0.09m³ bucket | 12 rpm swing | 23.1kN bucket digging force.
- **Robust construction:** The heavy-duty machine structure, engineered for China's demanding applications, handles North American and European job sites with ease.

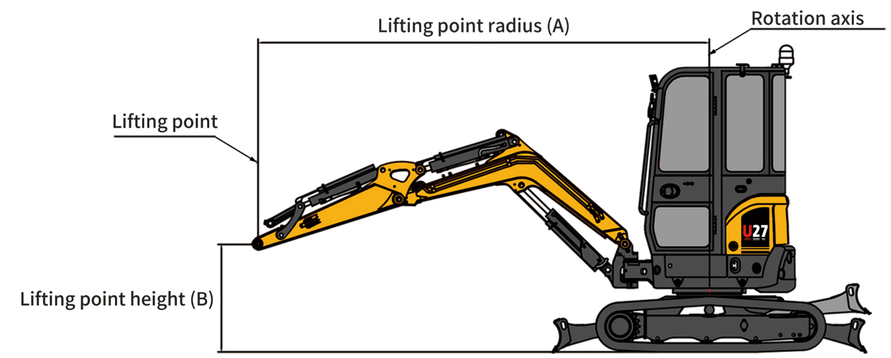

Standard arm, standard counterweight(C=kg)											
A		Max.		3.5 m		3.0 m		2.5 m		2.0 m	
B	(A=)										
3.0 m	3020	500*/500*	500*/500*	—	—	500*/500*	500*/500*	—	—	—	—
2.5 m	3380	390/375	500*/500*	—	—	480* /480*	480* /480*	—	—	—	—
2.0 m	3620	340/330	500*/405	565/350	500*/420	505*/505*	505*/505*	535*/535*	535*/535*	—	—
1.5 m	3750	310/305	530*/375	355/345	540*/415	435/425	565*/565*	585/675*	675*/675*	840*/840*	840*/840*
1.0 m	3810	300/295	545*/355	340/330	565*/405	430/415	680*/515*	550/530	825*/680	780/765	1065*/915
0.5 m	3780	300/290	560*/355	335/325	605*/400	410/400	720*/500	535/530	935*/650	720/700	1305*/895
0 m	3650	305/300	570*/365	325/315	625*/390	400/390	760*/485	525/505	965*/640	705/680	1280*/860
-0.5 m	3450	335/320	565*/400	—	—	390/380	720*/475	515/500	965*/630	725/690	1255*/855
-1.0 m	3120	390/390	595*/465	—	—	430/420	625*/505	545/545	850*/660	750/750	1120*/905
-1.5 m	2610	485/480	580*/580*	—	—	—	—	515/515	600*/600*	680/665	830*/830*

Explanation

The data contained in these tables represent the lifting capacity in accordance with ISO standard 10567. They don' t include the weight of the bucket and correspond to 75% of the maximum static tipping load or 87% of the hydraulic lifting power.
Data marked * are the hydraulic limits of the lifting power.